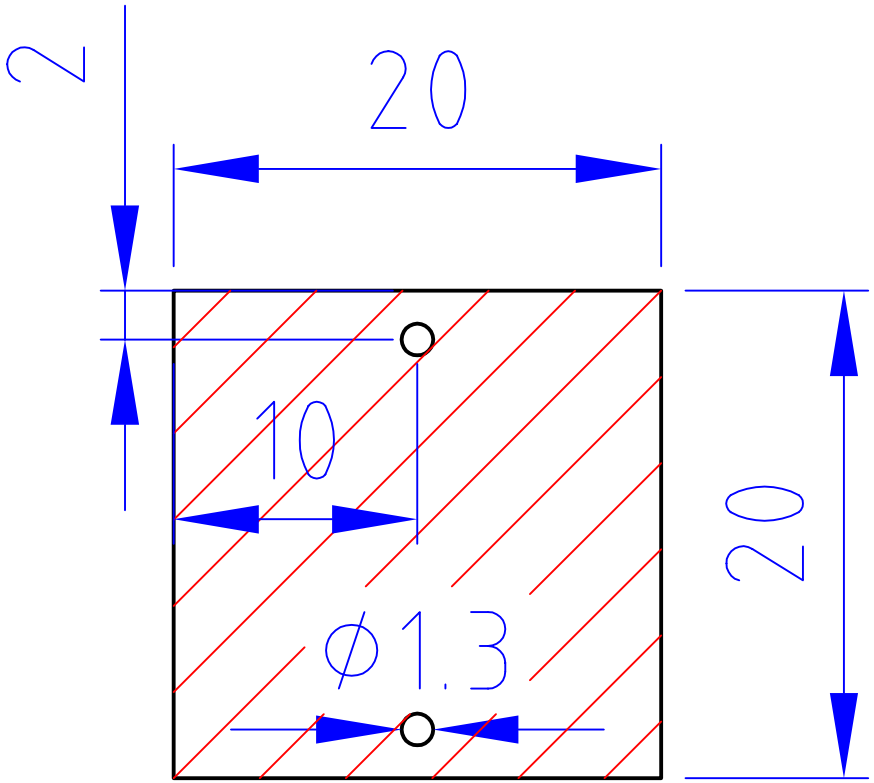

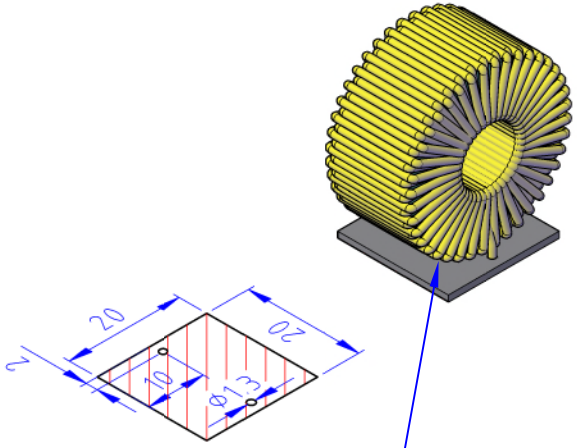

base plate thickness 1mm
ICE Part Nr.: 8024.2901.016
20 pcs.
glue the choke on the base plate

glue